nordlux®
Transportable
Lighting

1

KETTLE
TAKE ME ANYWHERE

Kettle 22

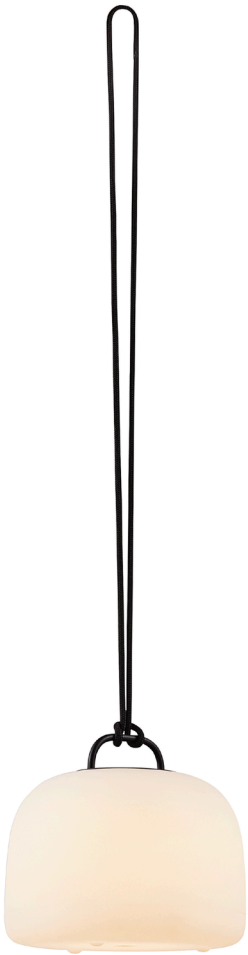

Kettle 22 Portable
2018003003

The possibilities are endless with the Kettle series of portable lights. Designed to be functional and elegantly simple, the Kettle can be easily transformed from a suspended pendant to a floor, table or outdoor garden lamp with a range of replaceable modular accessories that are optionally available.

Size	H: 19.6cm, W: 22cm, L: 22cm, Ø: 22cm
Material	Plastic
IP Class	IP65, Class 3
Hanging Cable	Black 150cm replaceable
USB Charging	Cable included
Light Source	Fixed LED, Incl. 4.8W LED, Incl. 3-step dimmer, Lumen 300, Kelvin 2700, Life hours 30,000, RA 80

1st CLICK
100%
300
LUMEN
5 HOURS

2nd CLICK
60%
200
LUMEN
10 HOURS

3rd CLICK
30%
100
LUMEN
16 HOURS

Kettle 36

Kettle 36 Portable
2018013003

The possibilities are endless with the Kettle series of portable lights. Designed to be functional and elegantly simple, the Kettle can be easily transformed from a suspended pendant to a floor, table or outdoor garden lamp with a range of replaceable modular accessories that are optionally available.

Size	H: 30.8cm, W: 36cm, L: 36cm, Ø: 36cm
Material	Plastic
IP Class	IP65, Class 3
Hanging Cable	Black 150cm replaceable
USB Charging	Cable included
Light Source	Fixed LED, Incl. 6.8W LED, Incl. 3-step dimmer, Lumen 450, Kelvin 2700, Life hours 30,000, RA 80

1st CLICK
100%
450 LUMEN 5 HOURS

2nd CLICK
60%
300 LUMEN 10 HOURS

3rd CLICK
30%
150 LUMEN 16 HOURS

Accessories

Tripod 31 - Metal

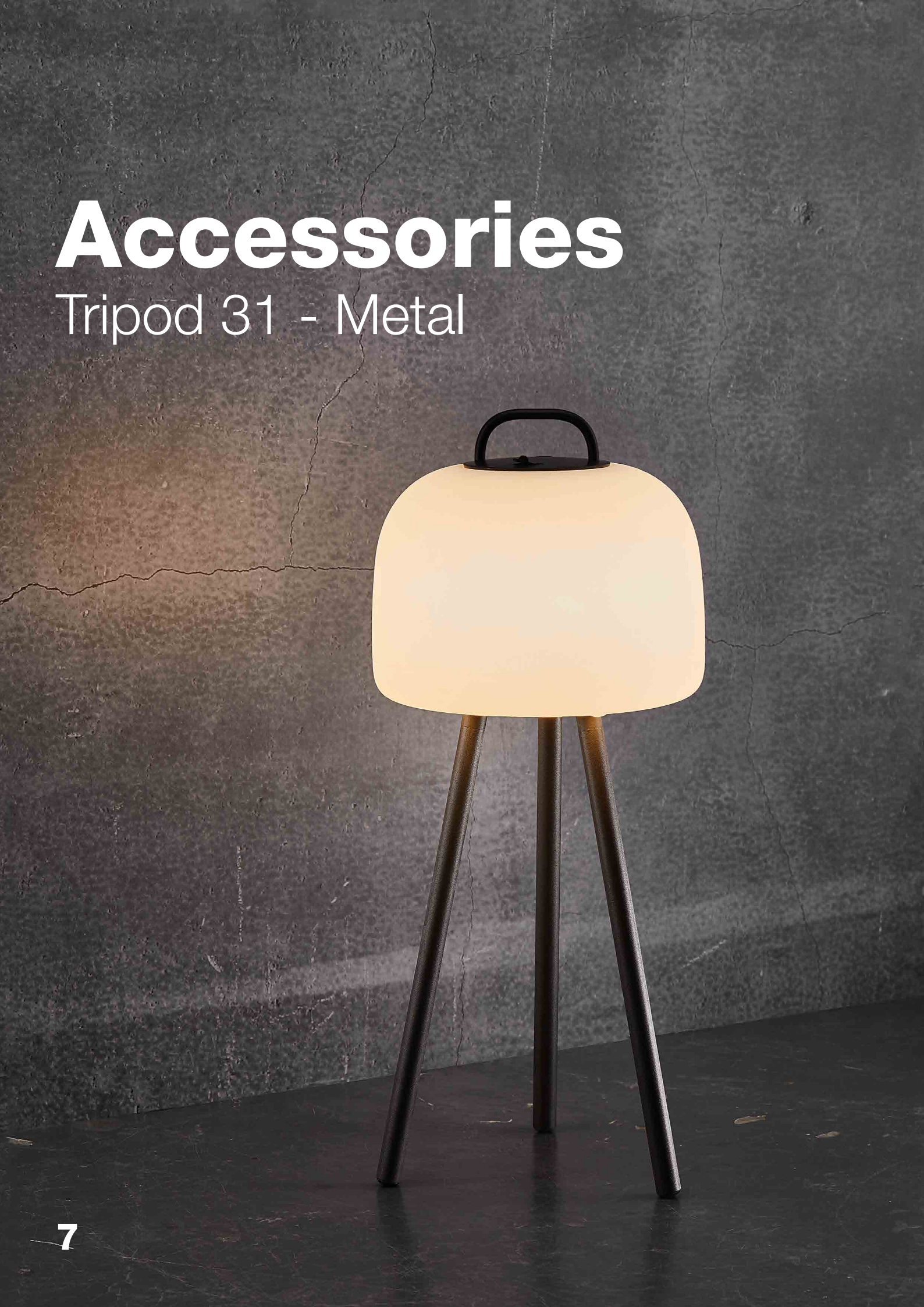

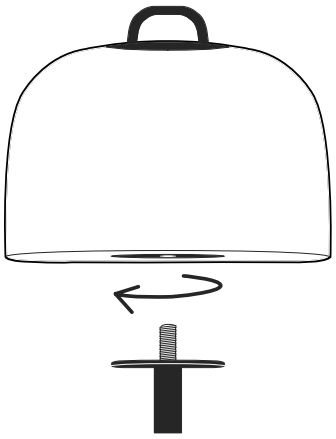

Tripod 31 Portable
2018035003
Black

With this accessory, Kettle is transformed into a beautiful table lamp with black lacquered metal legs. The lamp is portable and can be used on the terrace or as a regular table lamp inside the home. The accessory fits both Kettle 22 and 36.

Size	H: 34.4cm, W: 17.9cm, L: 15.7cm, Pipe Ø: 1.6cm
Material	Metal

Accessories

Tripod 31 - Wood

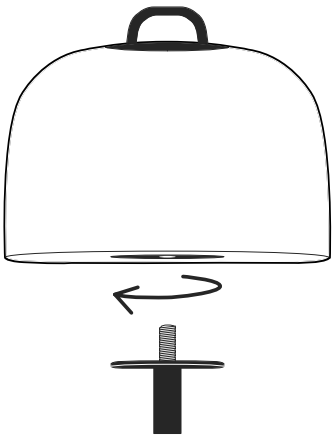

Tripod 31 Portable
2018035014
Natural (Brown)

With this accessory, Kettle is transformed into a beautiful table lamp with oak tree legs. The lamp is portable and can be used on the terrace or as a regular table lamp inside the home. The accessory fits both Kettle 22 and 36.

Size	H: 34.4cm, W: 17.9cm, L: 15.7cm, Pipe Ø: 1.6cm
Material	Wood / Metal

Accessories

Tripod 100 - Metal

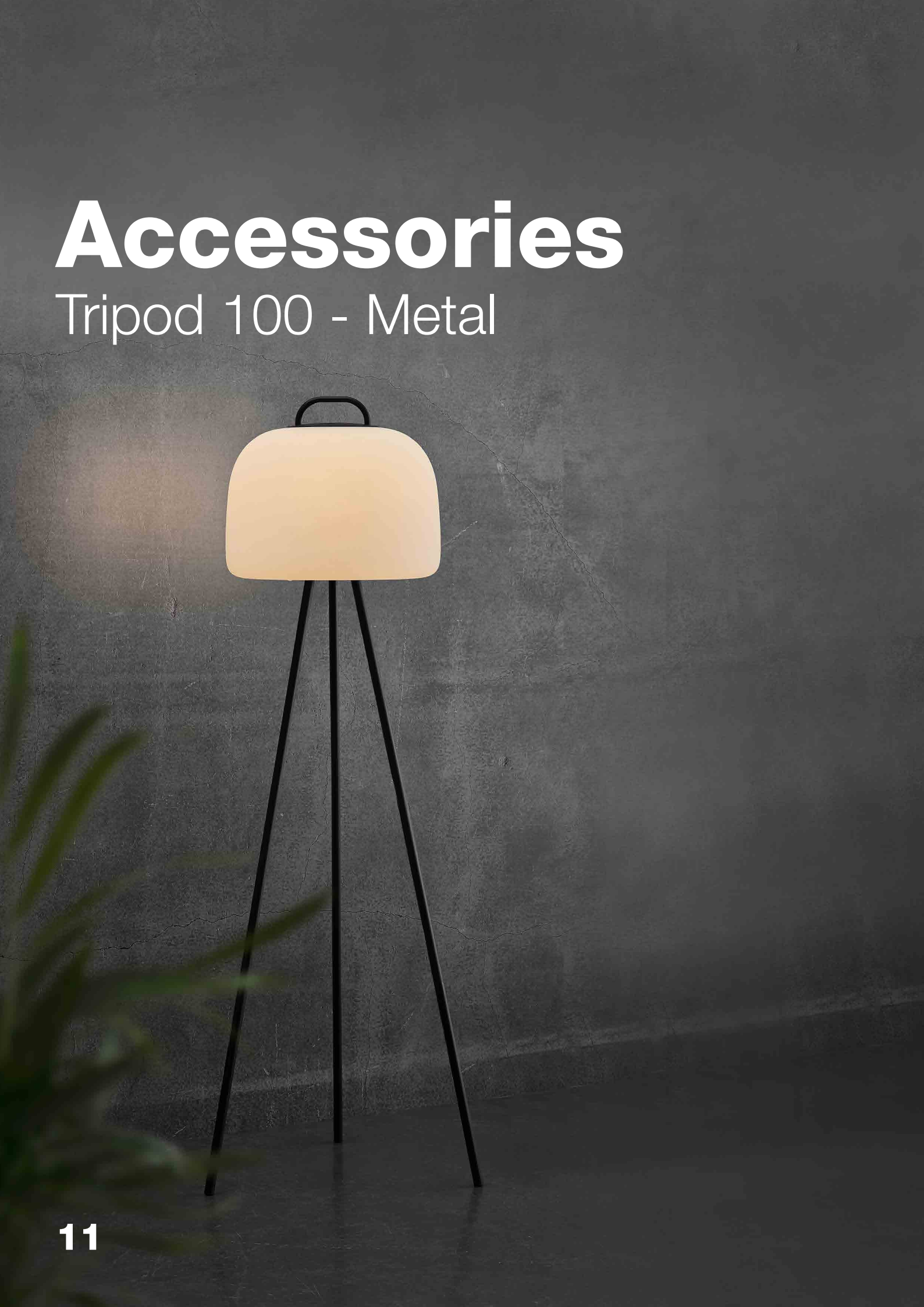

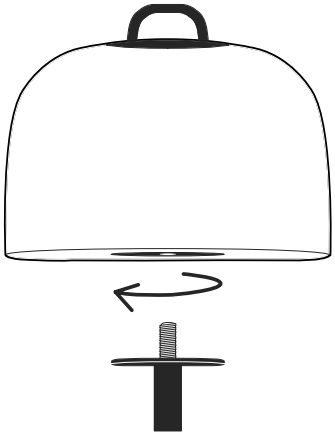

Tripod 100 Portable
2018044003
Black

With this accessory, Kettle is transformed into a beautiful floor lamp with black lacquered metal legs. The lamp is portable and can be used on the terrace or as an ordinary floor lamp in the living room. The accessory fits both Kettle 22 and 36.

Size	H: 102.9cm, W: 36.7cm, L: 32cm, Pipe Ø: 1.6cm
Material	Metal

Accessories

Tripod 100 - Wood

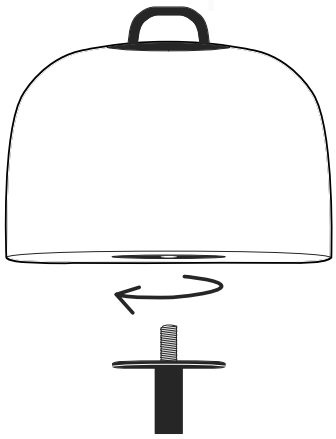

Tripod 100 Portable
2018044014
Natural (Brown)

With this accessory, Kettle is transformed into a beautiful floor lamp with oak tree legs. The lamp is portable and can be used on the terrace or as an ordinary floor lamp in the living room. This accessory fits both Kettle 22 and 36.

Size	H: 102.9cm, W: 36.7cm, L: 32cm, Pipe Ø: 1.6cm
Material	Wood / Metal

Accessories

Spike

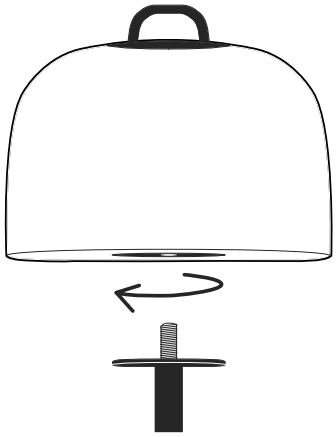

Spike Portable
2018028003
Black

With this accessory, Kettle is transformed into a portable spike lamp which can be placed in flowerbeds or along the driveway. The accessory fits both Kettle 22 and 36.

Size	H: 51.6cm, W: 5.8cm, L: 5.8cm, Pipe Ø: 1.8cm
Material	Metal / Aluminium

SPONGE
TAKE ME ANYWHERE

Sponge 20 Pendant

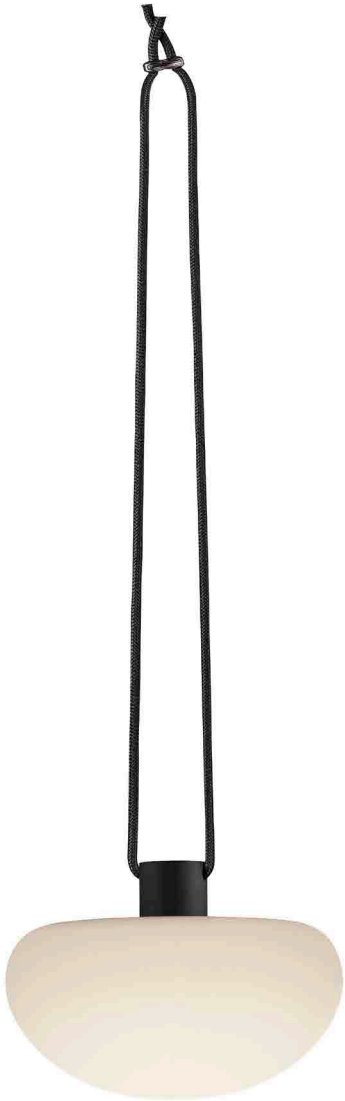

Sponge 20 Pendant
2018103003

The simple design and soft shape makes Sponge 20 an incredibly elegant series, suitable for inside and outside the home. With a built-in battery, this lamp can be placed and moved as you like. The brightness of the light can also be adjusted in three levels. There are many possibilities with the Sponge 20 Pendant, hang it in a tree with the included cord or place it directly on the terrace or floor in the living room. The choice is yours.

Size	H: 55.4cm, W: 20cm, L: 20cm, Ø: 20cm
Material	Plastic / Metal
IP Class	IP65, Class 3
Hanging Cable	Black 150cm replaceable
USB Charging	Cable included
Light Source	Fixed LED, Incl. 4.8W LED, Incl. 3-step dimmer, Lumen 300, Kelvin 2700, Life hours 30,000, RA 80

1st CLICK
100%
300 LUMEN 5 HOURS

2nd CLICK
60%
200 LUMEN 10 HOURS

3rd CLICK
30%
100 LUMEN 16 HOURS

Sponge 20 Spike

Sponge 20 Spike
2018128003

The simple design and soft shape makes Sponge 20 an incredibly elegant series, suitable for inside and outside the home. With a built-in battery, this lamp can be placed and moved as you like. The brightness of the light can also be adjusted in three levels. There are many possibilities with the Sponge 20 Spike, place it in garden flowerbeds, along the driveway or terrace. The choice is yours.

Size	H: 51.5cm, W: 20cm, L: 20cm, Ø: 20cm
Material	Plastic / Metal
IP Class	IP65, Class 3
USB Charging	Cable included
Light Source	Fixed LED, Incl. 4.8W LED, Incl. 3-step dimmer, Lumen 300, Kelvin 2700, Life hours 30,000, RA 80

1st CLICK
100%
300
LUMEN
5 HOURS

2nd CLICK
60%
200
LUMEN
10 HOURS

3rd CLICK
30%
100
LUMEN
16 HOURS

Sponge 20 To Go

Sponge 20 To Go
2018145003

The simple design and soft shape makes Sponge 20 an incredibly elegant series, suitable for inside and outside the home. With a built-in battery, the this lamp can be placed and moved as you like. The brightness of the light can also be adjusted in three levels. There are many possibilities with the Sponge 20 To Go, pick it up and take it with you anywhere you like. Use it outside on the terrace, take it with you on a picnic or create a cozy lighting inside in the living room. The choice is yours.

Size	H: 27.7cm, W: 22.5cm, L: 22.5cm, Ø: 22.5cm
Material	Plastic / Metal
IP Class	IP65, Class 3
USB Charging	Cable included
Light Source	Fixed LED, Incl. 4.8W LED, Incl. 3-step dimmer, Lumen 300, Kelvin 2700, Life hours 30,000, RA 80

1st CLICK
100%
300
LUMEN
5 HOURS

2nd CLICK
60%
200
LUMEN
10 HOURS

3rd CLICK
30%
100
LUMEN
16 HOURS

Sponge 20 Table

Sponge 20 Table
2018135003

The simple design and soft shape makes Sponge 20 an incredibly elegant series, suitable for inside and outside the home. With a built-in battery, this lamp can be placed and moved as you like. The brightness of the light can also be adjusted in three levels. There are many possibilities with the Sponge 20 Table, use it as a bedside lamp, place them around the house or in your outdoor living space. The choice is yours.

Size	H: 21.5cm, W: 20cm, L: 20cm, Ø: 20cm
Material	Plastic / Metal
IP Class	IP65, Class 3
USB Charging	Cable included
Light Source	Fixed LED, Incl. 4.8W LED, Incl. 3-step dimmer, Lumen 300, Kelvin 2700, Life hours 30,000, RA 80

1st CLICK
100%
300
LUMEN
5 HOURS

2nd CLICK
60%
200
LUMEN
10 HOURS

3rd CLICK
30%
100
LUMEN
16 HOURS

Sponge 34 Table

Sponge 34 Table
2018165003

The simple design and soft shape makes Sponge 34 an incredibly elegant series, suitable for inside and outside the home. With a built-in battery, this lamp can be placed and moved as you like. The brightness of the light can also be adjusted in three levels. There are many possibilities with the Sponge 34 Table, use it as a bedside lamp, place them around the house or in your outdoor living space. The choice is yours.

Size	H: 40.5cm, W: 34cm, L: 34cm, Ø: 34cm
Material	Plastic / Metal
IP Class	IP65, Class 3
USB Charging	Cable included
Light Source	Fixed LED, Incl. 6.8W LED, Incl. 3-step dimmer, Lumen 450, Kelvin 2700, Life hours 30,000, RA 80

1st CLICK
100%
450
LUMEN
5 HOURS

2nd CLICK
60%
300
LUMEN
10 HOURS

3rd CLICK
30%
150
LUMEN
16 HOURS

Sponge 34 Floor

Sponge 34 Floor
2018154003

The simple design and soft shape makes Sponge 34 an incredibly elegant series, suitable for inside and outside the home. With a built-in battery, this lamp can be placed and moved as you like. The brightness of the light can also be adjusted in three levels. Create a cosy atmosphere with the Sponge 34 Floor by placing it in the corner of a room.

Size	H: 126cm, W: 34cm, L: 34cm, Ø: 34cm
Material	Plastic / Metal
IP Class	IP65, Class 3
USB Charging	Cable included
Light Source	Fixed LED, Incl. 6.8W LED, Incl. 3-step dimmer, Lumen 450, Kelvin 2700, Life hours 30,000, RA 80

1st CLICK
100%
450
LUMEN
5 HOURS

2nd CLICK
60%
300
LUMEN
10 HOURS

3rd CLICK
30%
150
LUMEN
16 HOURS

Strap To Go

Strap To Go Portable
46195001

The Strap series was designed by Danish design duo Bjørn + Balle. This wonderfully functional table lamp can be taken anywhere. It features a distinctive wooden handle and a 3-step Moodmaker function, allowing you to control the atmosphere anywhere you go.

Size	H: 14.7cm, W: 15.5cm, L: 15.5cm, Ø: 15.5cm
Material	Plastic / Bamboo
IP Class	IP54, Class 3
USB Charging	Cable included
Light Source	Fixed LED, Incl. 2.5W LED, Incl. 3-step dimmer, Lumen 240, Kelvin 2700, Life hours 30,000, RA 80

1st CLICK
100%
240
LUMEN
5 HOURS

2nd CLICK
60%
120
LUMEN
10 HOURS

3rd CLICK
30%
60
LUMEN
16 HOURS

nordlux®

Award winning lights for everyone.
Est. 1977

energetic®
Smarter lighting

Proudly distributed by Energetic Lighting Australia Pty Ltd
For more information or to order please contact:

1300 215 598
sales@energeticlighting.com.au

nordlux.com.au | 1800 6673 589 | sales@nordlux.com.au
U2 350 Edgar Street, Condell Park, NSW 2200, Australia